力泰科技
LITAI TECHNOLOGY



Nanjing Litai is a research and development,design,sales,
service as one of the forging equipment manufacturing enterprise

To professional,refined,characteristic innovative development path

In products,brands,performances and other aspects of continuous breakthroughs

Forging supporting equipment supplier

Hot forging bolt & nut turnkey line
One-Stop End-to-End Solution

Tel:+86 15062202869(Technical consultation hotline)

www.njltzdh.com/www.litai-forge.com

No. 87 Huyue Road, Liuhe Economic Development Zone, Nanjing,China

Nanjing LiTai Intelligent Technology Co.ltd

Disclaimer: The graphic design of this promotional material is for reference only, not as a contract offer, the final contract shall prevail. Nanjing Litai Intelligent Technology Co., Ltd. reserves the right of final interpretation.

About us

Nanjing Litai Intelligent Technology Co., LTD., founded in 2016, is located in the Liuhe District of the beautiful Nanjing, with 6,000 square meters of intelligent manufacturing workshop and modern office buildings.

Litai has been deeply engaged in the industry for many years, is the standard setter of forging automation products, and provides forging enterprises with four major services: the whole process supporting equipment, automated production line, green environmental protection materials and enterprise management consulting. It is an intelligent manufacturing enterprise of forging equipment integrating research and development, design, manufacturing, sales and service, and takes the innovative development road of specialization, refinement and specialty.

Adhering to the enterprise mission of "serving small and medium-sized forging enterprises, helping the forging industry to make new strides, and promoting the innovation and development of China's industry", Litai will continue to provide customers with high-quality products and services, and foresee the future of forging together!

LITAI

Scientific design, whole line layout

Close link , easy to operate

Intelligent technology, efficient production



Enterprise mission

Service small and medium-sized forging enterprises

Help forging industry new leap

We will promote innovative development of China's industries

Enterprise culture

Create value for customers

Create opportunities for employees

Create wealth for science and technology

Enterprise vision

Connect 30000+ forging enterprises

Create a greener, more efficient and more high-tech production line

Help 1000+ forging industry invisible champion

Forging nuts line supporting service

According to the actual needs of customers, the technical team reasonably plans the layout of the production line, and the salesman customized the entire line layout of forged bolts and nuts for customers. Let more forging industry to achieve automated production, improve production efficiency, to solve the problem of recruitment difficulties.

Hot forged nut forging process

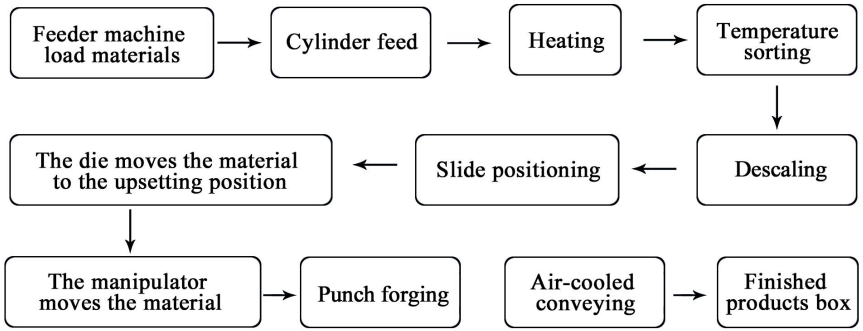

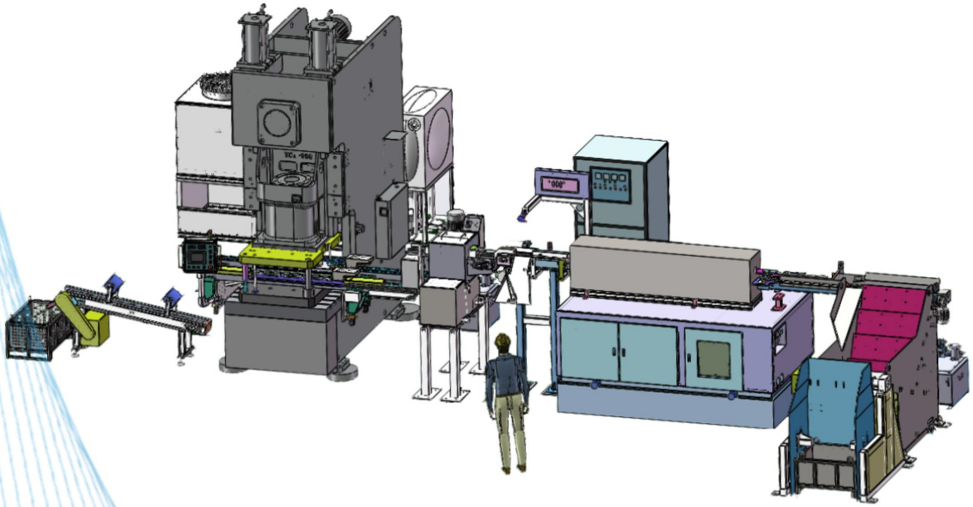

No need to search for the forging production line

Nanjing Litai is fully equipped

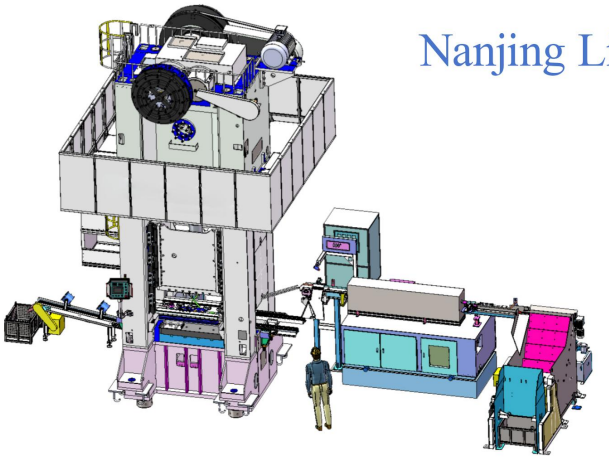

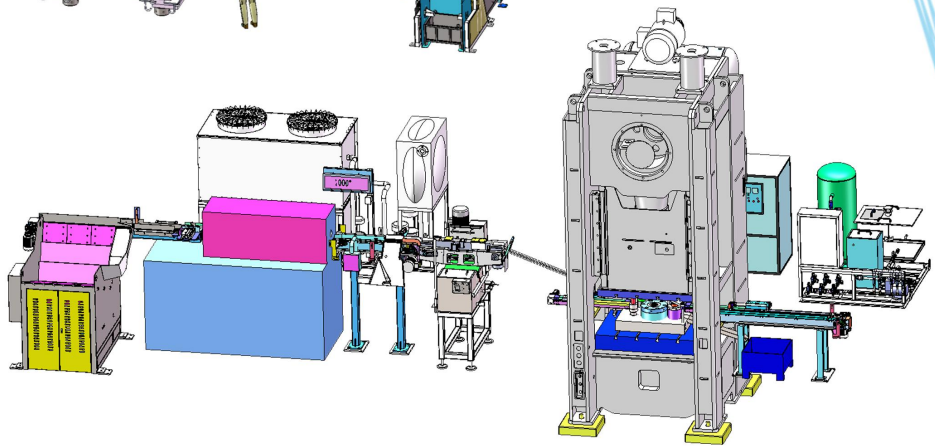

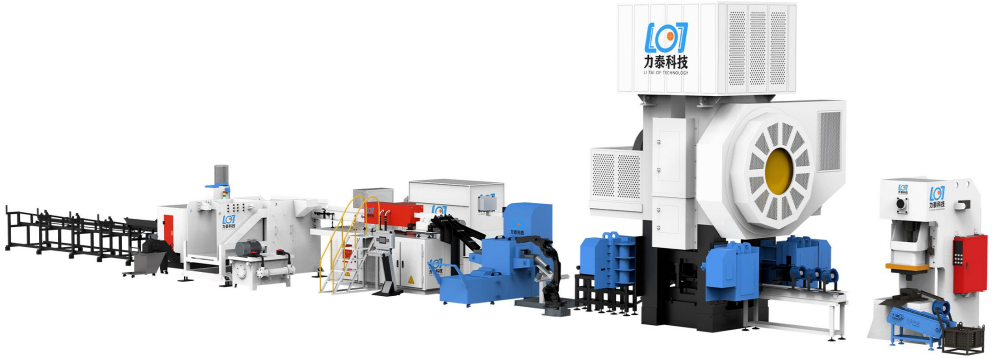

Forging bolts line supporting service

Through the overall planning of the whole line, we provide one-stop service work such as the design, production, assembly and debugging of supporting equipment, truly realize the purpose of one-stop purchase of all supporting equipment for forging enterprises, save time and energy for customers, and have a perfect, complete and consummate production line!

Long size bolts forging process

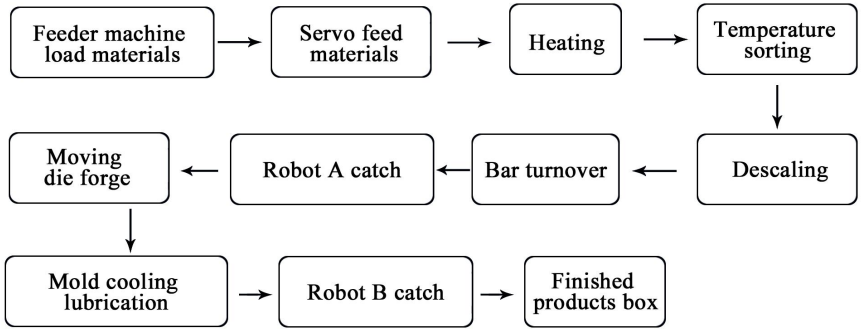

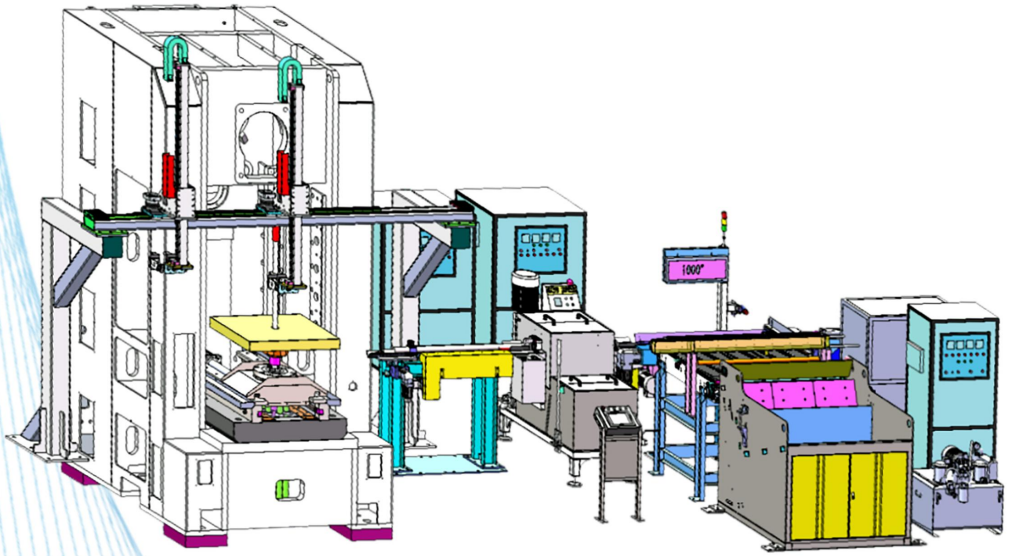

No need to search for the forging production line

Nanjing Litai is fully equipped

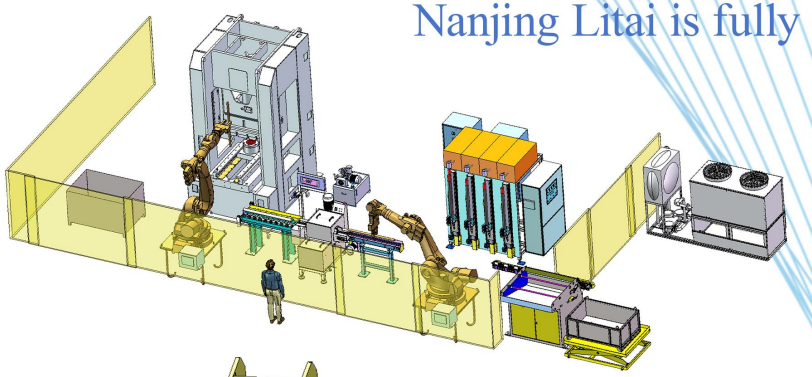

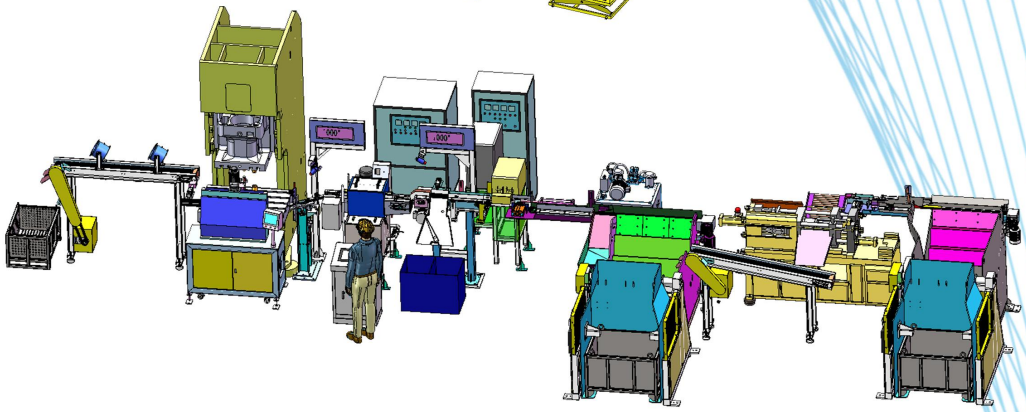

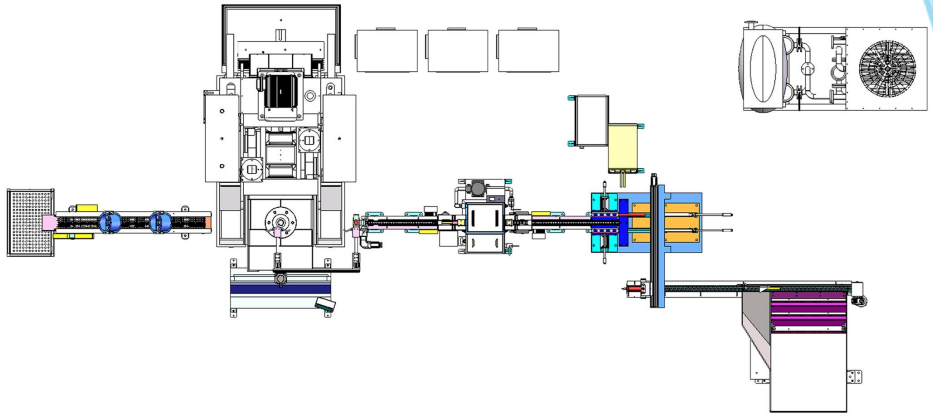

Tipper and feeder machine

After the hydraulic tipper turns the raw materials into the elevator, it stably loads the materials through the washboard type, replacing manual labor and improving production efficiency.



Equipment features:

1. Hydraulic tipper and feeder machine, the power from hydraulic, loading and unloading stability;

2.The whole body is made of 10mm steel sheet metal, strong and durable;

3.Multiple thick plate, using full process, effectively prevent deformation;

4.Lifting module adopts linear track, with dust-proof function.

Model No.	Size(mm)	Power	Bearing range	Suitable for bar diameter	Transport system	Conveyor chain
LT-TSJ-15-30	1500*800*1200	10kw	0-1000kg	Φ15-30	Inverter motor	Single double chain
LT-TSJ-30-50	1500*900*1200	10kw	0-1500kg	Φ30-50	Inverter motor	Single double chain
LT-TSJ-50-70	1500*1000*1200	15kw	0-2000kg	Φ50-70	Inverter motor	Single double chain
LT-TSJ-70-90	1500*1100*1200	15kw	0-2500kg	Φ70-90	Inverter motor	Single double chain
LT-TSJ-F	/	/	/	/	Inverter motor	Single double chain

Note: The specific size of the equipment is customized according to the length of the product.

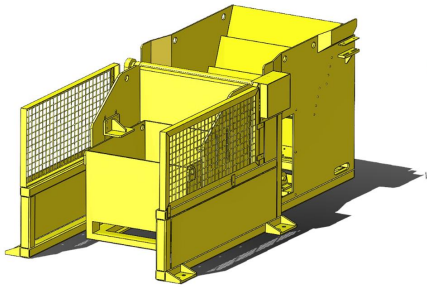

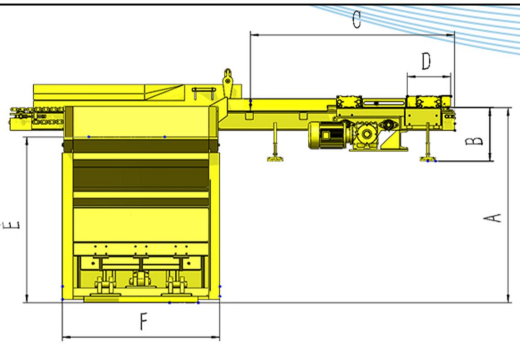

*The feeder machine can work independently, according to the customer's bar material specifications and induction heating furnace specifications, customized size, color of the feeder or tipper for customers.

Induction heating furnace



Reasonable design, reduce the height of the electric furnace, so that the whole line maintenance is simple and convenient, heating speed is fast, heating is uniform.
Equipment features:

1. Full digital control, high control accuracy, high reliability;

2.Voltage and current double closed-loop control system ;

3.Perfect protection system, high power factor operating characteristics;

4.perfect external control interface, 100% power on ability.

Parameters of induction heating furnace					Parameters of cooling tower		
Model No.	Input voltage(v)	Output power(kw)	Cooling Water Flow Rate (t/h)	Cooling hycraulic pressure (MPa)	Unit type	dimensions (mm)	Main pump (Power, flow, lift)
LT-IGBT-100KW	3-380	100	3	0.2-0.3	10T	2400*910*2150	3kw,23m³/h,28m
LT-IGBT-200KW	3-380	200	5	0.2-0.3	20T	3200*910*2200	3kw,23m³/h,28m
LT-IGBT-300KW	3-380	300	8	0.2-0.3	40T	3200*1160*2400	4kw,25m³/h,28m
LT-IGBT-400KW	3-380	400	12	0.2-0.3	50T	3800*1160*2450	5.5kw,46m³/h,28m
LT-IGBT-500KW	3-380	500	15	0.2-0.3	60T	No.1:2900*1160*2700 No.2:1100*1000*1800	7.5kw,50m³/h,32m

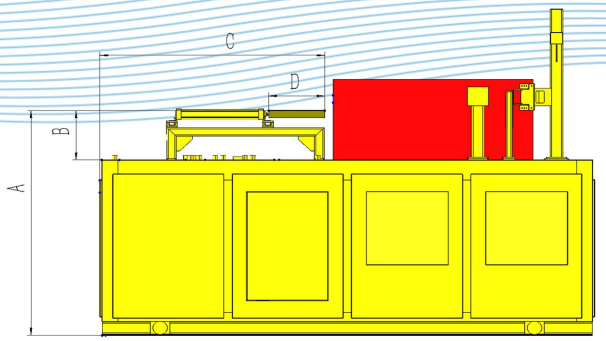

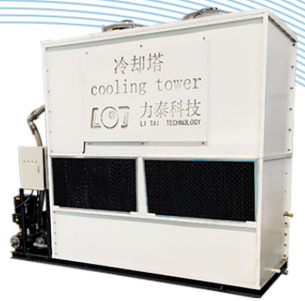

*The height from the ground of induction heating furnace to the feeding trough A corresponds to the height from the ground of elevator to the conveying chain A; The height of the induction heating furnace table top to the height of the feeding groove B corresponds to the height of the conveyor chain foot cup of the elevator to the chain B; The size from the edge of the induction heating furnace to the position of the furnace opening C corresponds to the extension length of the conveyor chain of the elevator C; The length of feeding groove D of induction heating furnace corresponds to the width of lifting machine.

Temperature sorting machine



Used on induction heating furnaces to control whether the temperature of raw materials is qualified. The overall structure adopts a height adjustable mode, which can directly connect to the induction heating furnace or support ground installation. Customers can purchase this equipment separately and install it on their own induction heating furnace; We also provide one-stop customized services such as design, assembly, installation, and post maintenance.

Equipment features:

1.Easy installation, stable operation.

2.Automatic temperature monitoring, triple sorting, select qualified temperature materials;

3.The distance between the conveying link material port and the induction heating furnace port can be adjusted to ensure that the material discharged from the induction heating furnace can be smoothly pushed into the conveying chain

Model No.	Exporting Height	Diameter of bar (mm)	Length of bar (mm)	Load capacity (kg)	Chain specification	Additional function
LT-FXJ-15-30	Height of the stove door±100	15-30	30-100	Below 5kg	8A/10A/12A	Butt hopper
LT-FXJ-30-50	Height of the stove door±100	30-50	50-150	Below 10kg	10A/12A/16A	Butt hopper
LT-FXJ-50-70	Height of the stove door±100	50-70	80-200	Below 20kg	16A/20A/24A	Butt hopper
LT-FXJ-70-90	Height of the stove door±100	70-90	100-250	Below 30kg	16A/20A/24A	Butt hopper

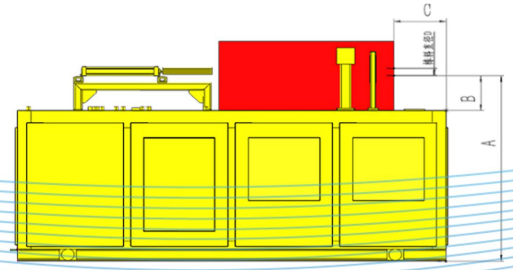

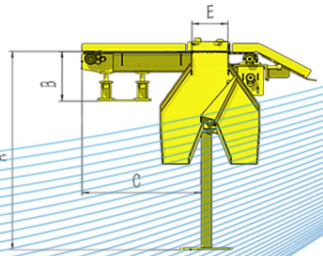

* The height of the ground to the induction heating furnace table A determines the height of the triple sorting ground to the conveyor chain A; the height of the induction heating furnace table B to the bottom of the discharge port of the furnace head determines the height of the triple sorting fixed bracket to the conveyor chain B; the distance between the furnace mouth and the side of the induction heating furnace C determines the distance between the triple sorting inlet and the ground support frame C; the diameter of the bar material D determines the width of the conveyor chain; The length of the bar material determines the size of the discharge port E for the triple separations.

Conveyor chain



Forging conveyor structure design is reasonable, according to different types of products, different process methods, targeted design can be single row conveyor, double row conveyor, string conveyor, plate chain conveyor, mesh chain conveyor and so on, so as to meet the needs of customers in various application scenarios.

Equipment features:

1.With high temperature resistance, no deformation

2.Light weight and high strength, good wear resistance, strong impact resistance, good maintenance.

3.High efficiency and energy saving, stable transmission, low failure rate

4.Equipment maintenance is easy to understand, long and stable service cycle

Name	Model No.	Inlet height	Outlet height	Width	Length	Speed	Material	Drive mode	Appearance treatment
Conveyor chain	LT-SSL-W-L	h	H	W	L	V	Carbon steel stainless steel	Frequency conversion Speed regulation	Paint/Spray

Note:Customers can customize counting, buffering, material receiving, air cooling and other functions according to their own needs.

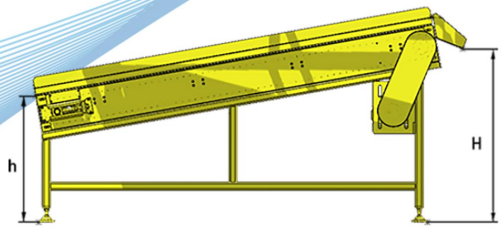

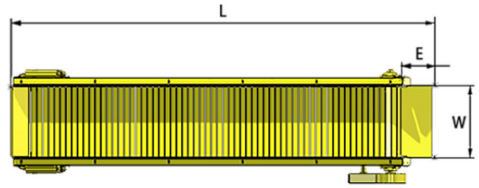

* Note: Litai can design and manufacture various specifications of products and equipments according to customers' requirements and on-site installation needs, and provide customers with high-quality products at reasonable prices.

Descaling machine

Descaling machine is also called oxide cleaning machine, design with stainless steel chain, equipped with multi-layer filtration function, to achieve 360° all-round cleaning of oxide, effective collection of oxide, oxide scale removal efficiency is high, good effect, can remove more than 95% of the oxide of electric furnace, is an indispensable equipment for forging line. The forging industry is generally upgrading the old production line, and increasing the oxide cleaning machine is an inevitable trend.



Equipment features:

1.Solve the problem of furnace oxidation skin, improve product surface quality;

2. Improve product pass rate, mold life;

3.Reduce raw material consumption, cut production costs.

Model	Size(mm) Length*width*height	Power (kw)	Work pressure (MPa)	Water tank material	Bar diameter (mm)	After forging diameter width*height(mm)	Nozzle quantity (Pcs)	Chain specification	Actuate method
LT-BP-50	1200*1150*1200	4.37	1.2-1.6	304	Φ 15-50	60*50	12	12A	Variable frequency motor
LT-BP-80-100	1420*1530*1470	8.25	1.6-2.0	304	Φ 20-80	100*80	16	12A	Variable frequency motor
LT-BP-80-160	1420*1530*1470	8.25	1.6-2.0	304	Φ 20-80	160*80	16	12A	Variable frequency motor
LT-BP-120-160	1620*1550*1600	11.75	1.6-2.0	304	Φ 55-120	160*120	24	12A	Variable frequency motor
LT-BP-120-220	1620*1550*1600	11.75	1.6-2.0	304	Φ 55-120	220*120	24	12A	Variable frequency motor
LT-BP-100-S	1620*1610*1500	15.75	2.8-3.5	304	Φ 60-100	100*100	16	12A	Variable frequency motor
LT-BP-150-S	1620*1610*1610	22.75	2.8-3.5	304	Φ 80-150	160*150	24	12A	Variable frequency motor
LT-SF-50	1200*1150*1000	4.37	1.2-1.6	304	Φ 15-50	60*50	12	12A	Servo motor
LT-SF-80-100	1420*1530*1270	8.25	1.6-2.0	304	Φ 20-80	100*80	16	12A	Servo motor
LT-SF-80-160	1420*1530*1270	8.25	1.6-2.0	304	Φ 20-80	160*80	16	12A	Servo motor
LT-SF-120-160	1620*1550*1400	15.75	1.6-2.0	304	Φ 55-120	160*120	24	12A	Servo motor
LT-SF-120-220	1620*1550*1400	15.75	1.6-2.0	304	Φ 55-120	220*120	24	12A	Servo motor

* Litai can design and manufacture various specifications of products and equipments according to customers' requirements and on-site installation needs, and provide customers with high-quality products at reasonable prices.

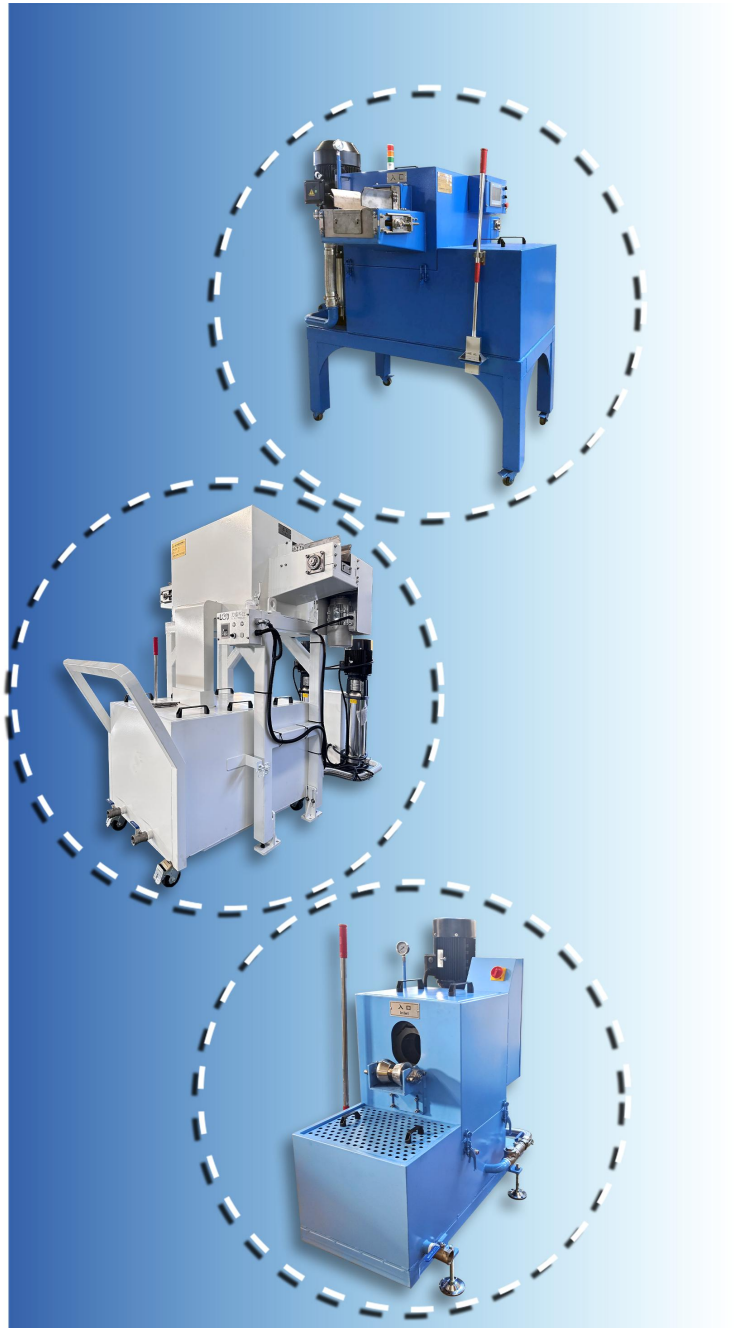

Partial custom machines

Lubrication workstation

It is used to store release agents and supply to automatic lubrication equipment, and storage tank are designed with stainless steel sheet metal. Separate lubrication and cleaning to achieve automatic lubrication and automatic cleaning. With automatic lubrication equipment to match and connect, help forging automatic production.



Lubrication workstation

Equipment features:

1.Central control release agent storage;

2.With pressurization tank, release agent atomization effect is good;

3.Large amount of jet, effectively remove the mold surface residual oxide.

Automatic lubrication equipment

Automatic lubrication equipment is delicate, small and space-saving, using servo control stroke, for forging and stripping, three times of spraying work will be carried out before forging, first jet, then spray release agent, and finally spray gas. Reduce the viscosity of the mold, so that the product better demoulding.

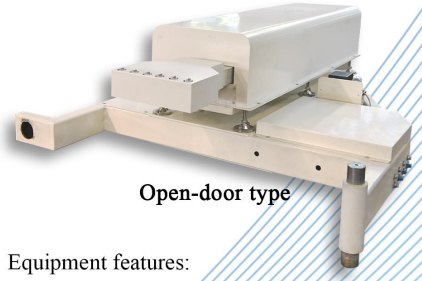

Open-door type

Equipment features:

1.Nozzle atomization, simulated product copying design, uniform spraying;

2.Can control the mold local spraying spray amount, the product better film removal;

3.High efficiency, 2S to achieve a full set of actions;

4.Automatic cleaning nozzle and line, prolong the service life;

5.More convenient for customers to replace the mold, repair the press etc.

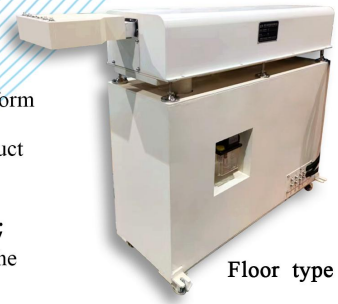

Floor type

Name	Model	Storage tank	Workstation installation space (mm)	Air connection	Gas (proof) curtain	Air compressor displacement	Reserved load switch	Power of Choice	Beat	Coverage area (mm)	Installation way	Spray pattern
Single station	LT-RHJ-S-1	one pc	1250*1250*1550	DN25 DN32	One or two routes are available	Above 1.5m³/min	⩾D25	Slider Lead screw	Two to four seconds	ϕ 50-150 Custom	Side mounted: floor standing rear shift Rear installation: floor standing side shift or rear shift Rear installation: door opening side flip	Fan shaped atomized cylindrical
Double station	LT-RHJ-S-1	one pc two pcs	1250*1250*1550	DN25 DN32	One or two routes are available	Above 3m³/min	⩾D32	Slider Lead screw	Two to four seconds	ϕ 50-150 Custom		

Open-door type: A, B size determines the fixed width of the equipment, C size is the height of the lower mold to the ground, D size is the upper and lower mold striking distance, E is the farthest distance from the fixed surface to the cavity; F is the distance from the hammer head to the fixed surface (the hammer head can be inside or outside the fixed surface), J dimension is the size of the space behind the main engine.
Floor type: C size is the height of the lower mold to the ground, D size is the upper and lower mold striking distance, F is the distance from the hammer head to the fixed surface, E is the farthest distance from the fixed surface to the cavity; F is the distance from the hammer head to the fixed surface (the hammer head can be inside or outside the fixed surface),J dimension is the size of the rear or side space of the main engine.

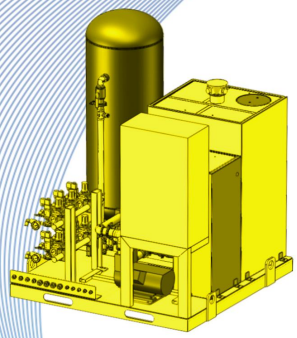

Lubrication workstation

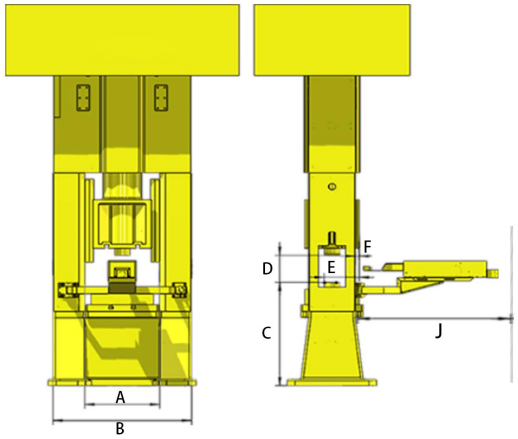

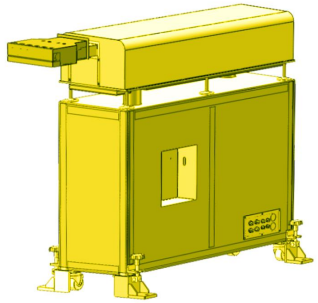

Floor type

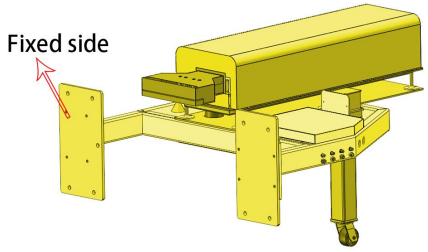

Open-door type

Automatic stepping beam

Automatic stepping beam is also called stepping beam conveyor, the main function can achieve the synchronous progress of different stations, with the press or punch, synchronous forging, robot instead of manual, greatly improve the efficiency, product uniqueness is very good.

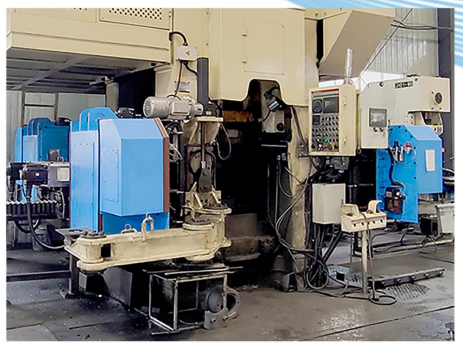

Equipment features:

1.The control system adopts the form of total control, unified control, one-key start and stop.

2.X axis direction: driven by the active motor to move the driven device, accurate accuracy, low failure rate.

3.Y axis direction: four of the same type servo motors control, accuracy to ensure a single servo accuracy within 10 wires, with automatic floating function.

4.Z axis direction: with lock function and balance system, with automatic floating function, effectively reduce the loss caused by collision.

Name	distance of travel(mm)	Power (kw)	control method Unilateral	Degree of freedom	Drive method	Installation Method	Synchronization method	Flat or not	Use of the product	Machine Tool & Hydraulics
X axis	300-400	10-15	2-bit control Two sided	One pc	Electronic control	Fixed on the Y axis	Active+follow-up	No	/	/
Y axis	200-400	10-20	4-bit control Two sided	One pc	Electronic control	Fixed on the Z axis	Four-bit synchronization	Yes	/	/
Z axis	200-300	15-20	4-bit control	One pc	Electronic control	Machine side mounting	Four-bit synchronization	Yes	/	/
Overall	/	35-45	10-bit synchronization 2-bit follow up	Three pcs	Electronic control +gas control	Simultaneous installation in Y axis Z axis and machine side mounting	Trio four-bit synchronization	Yes	Disc parts Products above 1kg	Hot die forging press

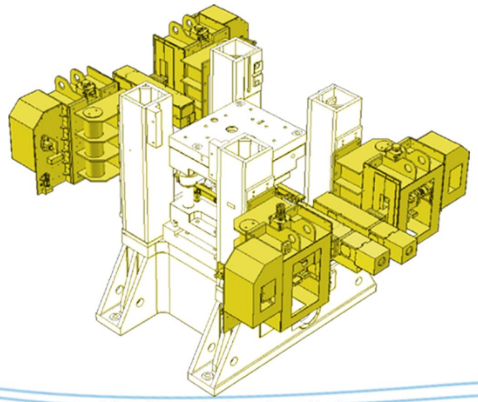

* According to customer product specifications, design, installation, maintenance and other customized services for customers.

Single/Double side manipulator



control panel | basic machine | electric control cubicle

Single/Double side manipulator is a kind of hot forging multi-station manipulator, which installs multiple sets of molds on the same punch for continuous automatic production, which can improve the automation degree of the production process. The application of Single/Double side manipulator in the production process is conducive to improving the transmission of materials, the loading and unloading of workpieces, the replacement of tools and other automatic processes.

Equipment features:

1.The product V-shaped clamp wear, screw off the bolt, so as to complete the disassembly of the V-shaped clamp, easy to replace, fast;

2.The set of long holes can adjust the actual installation position of the V-type clamp block, reduce the processing error of the V-type clamp block, resulting in the problem of large concentricity deviation when the clamping jaw assembly is clamping the blank;

3.The invention monitors the status of the punch by setting the broken punch protection, prevents the die from being damaged due to the blank not being hit, and the claw assembly can detect whether the blank is caught by the claw, thus realizing the automatic production (optional).

Model	Load	Production beat	Drive method	Environment temperature	Installation Method
LT-D-5	5kg	20+3pcs/min	AC servo	0-50℃	Fuselage mounting
LT-S-10	10kg	20+3pcs/min	AC servo	0-50℃	Fuselage mounting

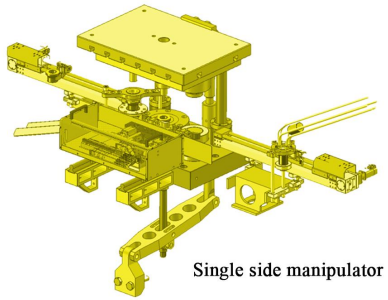

Single side manipulator

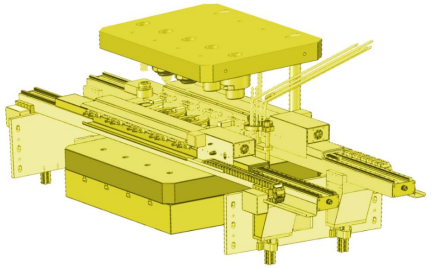

Double side manipulator

* According to customer product specifications, provide a series of customized services for customers, including design ,instullation,maintenance,etc.

COMPANY HONOR

In 2015, Litai established a project to develop the first forged oxide cleaning machine in China. With eight years of continuous innovation and development, Litai Technology has become a representative enterprise of domestic oxide cleaning machine! After 8 years of continuous innovation and development, Litai has more than 30 patented technologies in the forging industry, and has been rated as a listed enterprise on the New fourth Board of Jiangsu Equity Exchange, a national high-tech enterprise, a specialized and special new enterprise and a private technology enterprise in Jiangsu Province, and has won the attention of the Liuhe government and the Science and Technology Bureau, and has been awarded honorary awards by the Liuhe District government for many times. In addition, he also joined the China Forging Association and became a member and governing unit of the Forging Association, contributing his own strength to the Chinese industry.















In 2022, Nanjing Litai has gone from its initial single forging equipment to the current layout of the entire forging line, providing one-stop services such as supporting design, production, assembly, and debugging for the entire line for forging factories, truly achieving the goal of one-stop procurement of all supporting equipment for forging enterprises,Up to now, Litai technology has served hundreds of domestic forging enterprises, with a perfect pre-sales and after-sales service process: take the initiative to visit the use of customers, respond to customer needs at any time, and solve problems within 48 hours, and have received countless praise and appreciation from customers. It is also going abroad, Long term cooperative clients in many countries. Actively participate in the industry exhibition for exchange and learning, and establish a good cooperative relationship with the leading forging enterprises, hand in hand to create the future!

Domestic: you can order directly through Nanjing head office .

Abroad:Vietnam, India, Russia, Indonesia, Japan, Türkiye, the Czech Republic, Iran, the United States, Brazil, Australia, Singapore, Thailand and other long-term cooperation customers.





Cooperation Customers